BLU DOT

SERIES 11

5 DRAWER DRESSER

ASSEMBLY NOTES

GOES TO 11 — IN THREE EASY STEPS

CARE

Clean with a slightly damp, soft cloth. To remove dirt and fingerprints, use a quality cleaner formulated for wood furniture. Wipe completely dry with a soft cloth in the direction of the wood grain.

PARTS

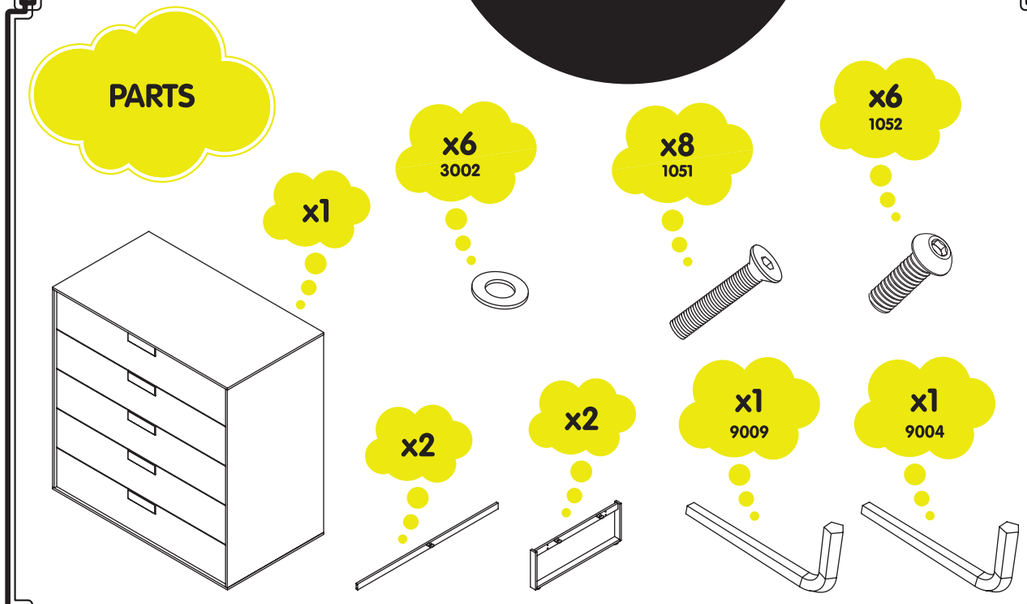

1

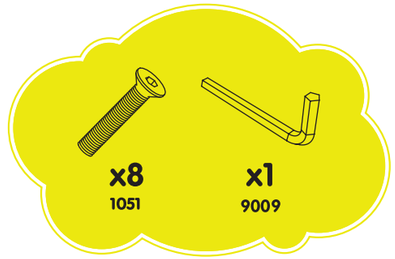

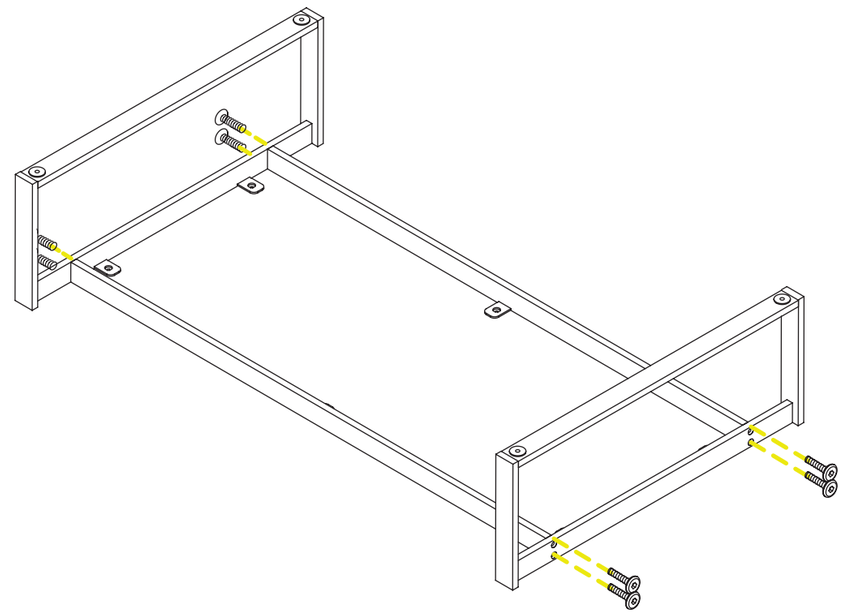

2

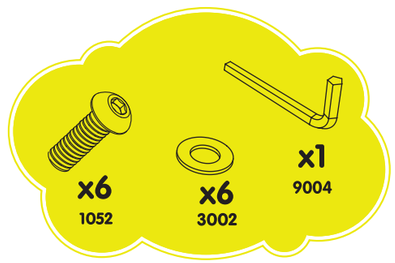

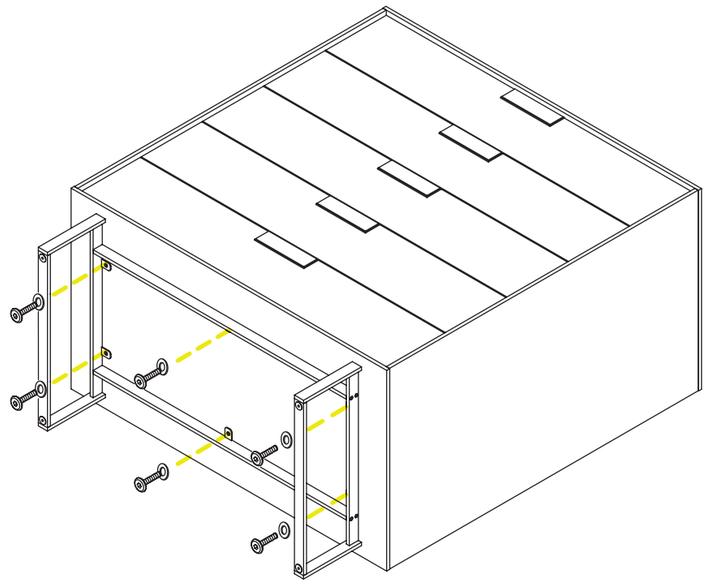

NOTE

To remove a drawer:
1. Extend the drawer completely.
2. squeeze both locks on the underside of the drawer while pulling the drawer out.

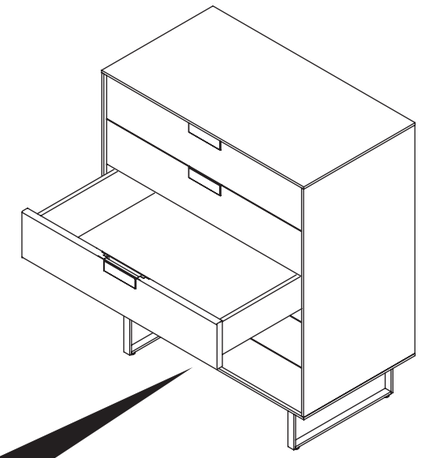

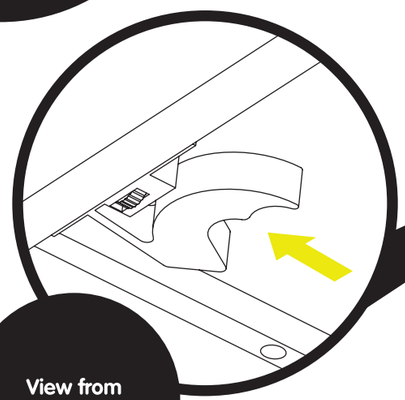

View from underneath drawer

NOTE
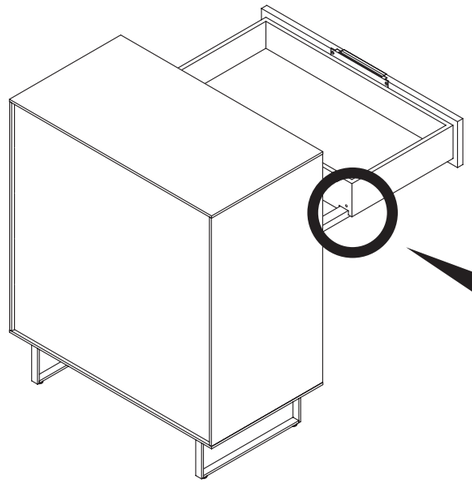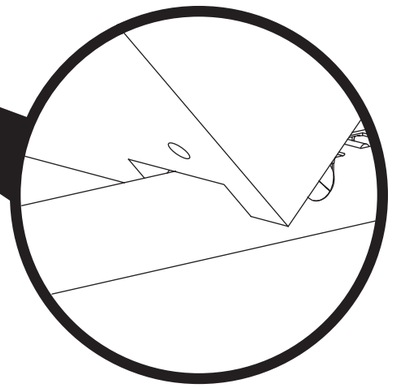
To reinstall:
1. pull both sides forward
2. place the drawer as shown and push closed